Work Order ID 69752

Wednesday, May 18, 2011 12:32:37 PM

Item ID: D3324-041 **Accept** **Setup Start** **Stop**

Revision ID:

Item Name: Basket Base Assembly

Start Date: 5/18/2011 **Start Qty:** 1.00 **Cust Item ID:**

Required Date: 5/23/2011 **Req'd Qty:** 1.00 **Customer:**

Reference:

Run Start **Stop**

Approvals: **Process Plan:** H **Date:** 11-05-18 **Tooling:** _____ **Date:** _____

QC: _____ **Date:** _____ **SPC (Y/N):** _____ **Date:** _____

Sequence ID/ Work Center ID	Operation Description	Set Up/ Run Hours	Tool ID	Tool #	Plan Code	Accept Qty	Reject Qty	Reject Number	Insp. Stamp
Draw Nbr	**Revision Nbr**								
D3324	Rev B								
100		0.00							
Large Fab	Large Fab								
	Memo	0.00							
Large Fab	1-Cut tubes as per Dwg D3324								
	Qty / Part Number / Description / Batch								
	3 D3324-1 Bottom Tube M112786								
	4 D3324-3 Full Length Tube M112786								
	2 D3324-5 Top End Tube M112786								
	2 D3324-7 Bottom EndTube M112786								
	10 D3324-9 Vertical Tube M112786								
	2- Weld as per dwg Bt#: M100075								
110	QC9- Inspect visual per QSI004- Fusion Welds	0.00							
QC	**Memo**	0.00							
Quality Control									

11.05.26

1 Ø BE 11/05/26

Dart Aerospace Ltd

W/O:		WORK ORDER CHANGES					
DATE	STEP	PROCEDURE CHANGE	By	Date	Qty	Approval Chief Eng / Prod Mgr	Approval QC Inspector

Part No: _____ PAR #: _____ Fault Category: _____ NCR: Yes No DQA: _____ Date: _____

Resolution: _____ Disposition: _____ QA: N/C Closed: _____ Date: _____

NCR:		WORK ORDER NON-CONFORMANCE (NCR)						
DATE	STEP	Description of NC Section A	Corrective Action Section B			Verification Section C	Approval Chief Eng	Approval QC Inspector
			Initial Chief Eng	Action Description Chief Eng	Sign & Date			

NOTE: Date & initial all entries

H:\fFORMS\Quality Assurance\approved QA\NCRWO RevE

Work Order ID 69752

Wednesday, May 18, 2011 12:32:37 PM

Item ID: D3324-041
Revision ID:
Item Name: Basket Base Assembly
Start Date: 5/18/2011 **Start Qty:** 1.00
Required Date: 5/23/2011 **Req'd Qty:** 1.00
Reference:

Accept

Setup Start
Stop

Cust Item ID:
Customer:

Run Start
Stop

Approvals: **Process Plan:** _____ **Date:** _____ **Tooling:** _____ **Date:** _____
QC: _____ **Date:** _____ **SPC (Y/N):** _____ **Date:** _____

Sequence ID/ Work Center ID	Operation Description	Set Up/ Run Hours	Tool ID	Tool #	Plan Code	Accept Qty	Reject Qty	Reject Number	Insp. Stamp
120 QC Quality Control	QC5 Inspect part completeness to step on W/O **Memo**	0.00 0.00							
121 HandFinish Hand Finishing	Pressure Wash per QSI005 4.3 **Memo**	0.00 0.00				1		11-5-26.	

Dart Aerospace Ltd

W/O:		WORK ORDER CHANGES					
DATE	STEP	PROCEDURE CHANGE	By	Date	Qty	Approval Chief Eng / Prod Mgr	Approval QC Inspector

Part No: _____ **PAR #:** _____ **Fault Category:** _____ **NCR:** Yes No **DQA:** _____ **Date:** _____

Resolution: _____ **Disposition:** _____ **QA: N/C Closed:** _____ **Date:** _____

NCR:		WORK ORDER NON-CONFORMANCE (NCR)						
DATE	STEP	Description of NC Section A	Corrective Action Section B			Verification Section C	Approval Chief Eng	Approval QC Inspector
			Initial Chief Eng	Action Description Chief Eng	Sign & Date			

NOTE: Date & initial all entries

H:\fFORMS\Quality Assurance\approved QA\NCRWO RevE

Work Order ID 69752

Wednesday, May 18, 2011 12:32:37 PM

Item ID: D3324-041 **Accept** **Setup Start** **Stop**

Revision ID:

Item Name: Basket Base Assembly

Start Date: 5/18/2011 **Start Qty:** 1.00 **Cust Item ID:**

Required Date: 5/23/2011 **Req'd Qty:** 1.00 **Customer:**

Reference:

Run Start **Stop**

Approvals: **Process Plan:** _____ **Date:** _____ **Tooling:** _____ **Date:** _____

QC: _____ **Date:** _____ **SPC (Y/N):** _____ **Date:** _____

Sequence ID/ Work Center ID	Operation Description	Set Up/ Run Hours	Tool ID	Tool #	Plan Code	Accept Qty	Reject Qty	Reject Number	Insp. Stamp
130	White Gloss(Ref:4.3.5.1) per QSI005 4.3-Alum	0.00							
Powdercoat	M116 ~~[illegible]~~ 964					1		11-5-07.	
Powder Coating	**Memo**	0.00							
	1ST COAT: START TIME: 7:30 OVEN TEMPERATURE: 400° FINISH TIME: 8:00 ********* 2nd coat if necessary********** 2ND COAT: START TIME: _____ OVEN TEMPERATURE: _____								
140	QC3- Inspect Part Finish	0.00				1	0		11/05/07
QC	**Memo**	0.00							
Quality Control									

Dart Aerospace Ltd

W/O:		WORK ORDER CHANGES					
DATE	STEP	PROCEDURE CHANGE	By	Date	Qty	Approval Chief Eng / Prod Mgr	Approval QC Inspector

Part No: _____ **PAR #:** _____ **Fault Category:** _____ **NCR:** Yes No **DQA:** _____ **Date:** _____

Resolution: _____ **Disposition:** _____ **QA: N/C Closed:** _____ **Date:** _____

NCR:		WORK ORDER NON-CONFORMANCE (NCR)						
DATE	STEP	Description of NC Section A	Corrective Action Section B			Verification Section C	Approval Chief Eng	Approval QC Inspector
			Initial Chief Eng	Action Description Chief Eng	Sign & Date			

NOTE: Date & initial all entries

H:\fFORMS\Quality Assurance\approved QA\NCRWO RevE

Work Order ID 69752

Wednesday, May 18, 2011 12:32:37 PM

Item ID: D3324-041 **Accept** **Setup Start**

Revision ID: **Stop**

Item Name: Basket Base Assembly

Start Date: 5/18/2011 **Start Qty:** 1.00 **Cust Item ID:**

Required Date: 5/23/2011 **Req'd Qty:** 1.00 **Customer:**

Reference:

Run Start

Approvals: **Process Plan:** _____ **Date:** _____ **Tooling:** _____ **Date:** _____

Stop

QC: _____ **Date:** _____ **SPC (Y/N):** _____ **Date:** _____

Sequence ID/ Work Center ID	Operation Description	Set Up/ Run Hours	Tool ID	Tool #	Plan Code	Accept Qty	Reject Qty	Reject Number	Insp. Stamp
150	Identify as per dwg & Stock Location: GA	0.00							
Packaging	Memo w/o 69746	0.00	SB 11/05/27			1			
Packaging									
160	QC21- Final Inspection - Work Order Release	0.00						11/5/30	
QC	Memo	0.00							
Quality Control									

MF 11-05-27

Dart Aerospace Ltd

W/O:		WORK ORDER CHANGES					
DATE	STEP	PROCEDURE CHANGE	By	Date	Qty	Approval Chief Eng / Prod Mgr	Approval QC Inspector

Part No: _____ **PAR #:** _____ **Fault Category:** _____ **NCR:** Yes No **DQA:** _____ **Date:** _____

Resolution: _____ **Disposition:** _____ **QA: N/C Closed:** _____ **Date:** _____

NCR:		WORK ORDER NON-CONFORMANCE (NCR)						
DATE	STEP	Description of NC Section A	Corrective Action Section B			Verification Section C	Approval Chief Eng	Approval QC Inspector
			Initial Chief Eng	Action Description Chief Eng	Sign & Date			

NOTE: Date & initial all entries

H:\fFORMS\Quality Assurance\approved QA\NCRWO RevE

Picklist Print

Wednesday, May 18, 2011 12:32:47 PM

Work Order ID: 69752

Parent Item: D3324-041

Parent Item Name: Basket Base Assembly

Start Date: 5/18/2011 **Required Date:** 5/23/2011

Start Qty: 1.00 **Required Qty:** 1.00

Comments: IPP Rev:A□05.02.09□New issue□KJ/JLM□
IPP Rev:B 08-12-16 attach DEO DD verified by:EC

Component Item ID/ Item Name	Replacement Item ID	Mfg/ Purch	Bin Item	Primary Location	Last Location	Route Seq ID	Unit of Measure	Qty on Hand	Qty per Kit	Total Qty	Qty Issued	Date Issued	Status
D3328-3 Basket Hinge		Manufactured	No			100	Each	32.0000	2	2	11.05.26		
				Location		**Loc Qty**		**Loc Code**					
				WA005 33872		32 32				2			
D3348-1 Clevis		Manufactured	No			100	Each	21.0000	4	4	11.05.26		
				Location		**Loc Qty**		**Loc Code**					
				WA005 44246		21 21				4			
D3349-3 Spacer Bushing		Manufactured	No			100	Each	8.0000	2	2	11.05.25		
				Location		**Loc Qty**		**Loc Code**					
				WA005 41831		8 8				2			
D3367-1 Mounting Bracket		Manufactured	No			100	Each	36.0000	2	2	11.05.26		
				Location		**Loc Qty**		**Loc Code**					
				WA005 43228		36 36				2			

Dart Aerospace Ltd

W/O:		WORK ORDER CHANGES					
DATE	STEP	PROCEDURE CHANGE	By	Date	Qty	Approval Chief Eng / Prod Mgr	Approval QC Inspector

Part No: _____ **PAR #:** _____ **Fault Category:** _____ **NCR:** Yes No **DQA:** _____ **Date:** _____

Resolution: _____ **Disposition:** _____ **QA: N/C Closed:** _____ **Date:** _____

NCR:		WORK ORDER NON-CONFORMANCE (NCR)						
DATE	STEP	Description of NC Section A	Corrective Action Section B			Verification Section C	Approval Chief Eng	Approval QC Inspector
			Initial Chief Eng	Action Description Chief Eng	Sign & Date			

NOTE: Date & initial all entries

H:\fFORMS\Quality Assurance\approved QA\NCRWO RevE

Picklist Print

Wednesday, May 18, 2011 12:32:48 PM

Work Order ID: 69752

Parent Item: D3324-041

Parent Item Name: Basket Base Assembly

Start Date: 5/18/2011 **Required Date:** 5/23/2011

Start Qty: 1.00 **Required Qty:** 1.00

M4130NTS0.500W.035	Purchased	No	100	f	555.7500	46.6	49.05263	11.05.25

4130 Square tube .500 x .500 x .035w

Location	Loc Qty	Loc Code
MAT034	555.75	
109127	216	
109385	15.75	
112786	324	

M569EX0.50-18F	Purchased	No	100	sf	66.0000	28	28	11.05.25

569 Expanded Metal

Location	Loc Qty	Loc Code
MAT018	66	
112776	66	

Dart Aerospace Ltd

W/O:		WORK ORDER CHANGES					
DATE	STEP	PROCEDURE CHANGE	By	Date	Qty	Approval Chief Eng / Prod Mgr	Approval QC Inspector

Part No: _____ **PAR #:** _____ **Fault Category:** _____ **NCR:** Yes No **DQA:** _____ **Date:** _____

Resolution: _____ **Disposition:** _____ **QA: N/C Closed:** _____ **Date:** _____

NCR:		WORK ORDER NON-CONFORMANCE (NCR)						
DATE	STEP	Description of NC Section A	Corrective Action Section B			Verification Section C	Approval Chief Eng	Approval QC Inspector
			Initial Chief Eng	Action Description Chief Eng	Sign & Date			

NOTE: Date & initial all entries

H:\fFORMS\Quality Assurance\approved QA\NCRWO RevE

DESIGN	DRAWN BY	DART AEROSPACE LTD HAWKESBURY, ONTARIO, CANADA	
PH	PH		
CHECKED	APPROVED	DRAWING NO.	REV. B
		D3324	SHEET 1 OF 3
DATE		TITLE	SCALE
05.03.04		BASKET BASE ASSEMBLY	NTS

A	04.10.20	NEW ISSUE
B	05.03.04	UPDATE MESH MATERIAL SPEC

PARTS LIST FOR D3324-041 BASKET BASE ASSEMBLY

Part No.	Quantity (-041)	Length A	Length B	Length C	Description
D3324-1	3	14.00	N/A	N/A	BOTTOM TUBE
D3324-3	4	N/A	86.50	N/A	FULL LENGTH TUBE
D3324-5	2	N/A	16.00	N/A	TOP END TUBE
D3324-7	2	N/A	15.00	N/A	BOTTOM END TUBE
D3324-9	10	N/A	N/A	11.04	VERTICAL TUBE
D3328-3	2	N/A	N/A	N/A	HINGE PLATE
D3348-1	4	N/A	N/A	N/A	CLEVIS
D3349-3	2	N/A	N/A	N/A	SPACER BUSHING
D3367-1	2	N/A	N/A	N/A	MOUNTING BRACKET

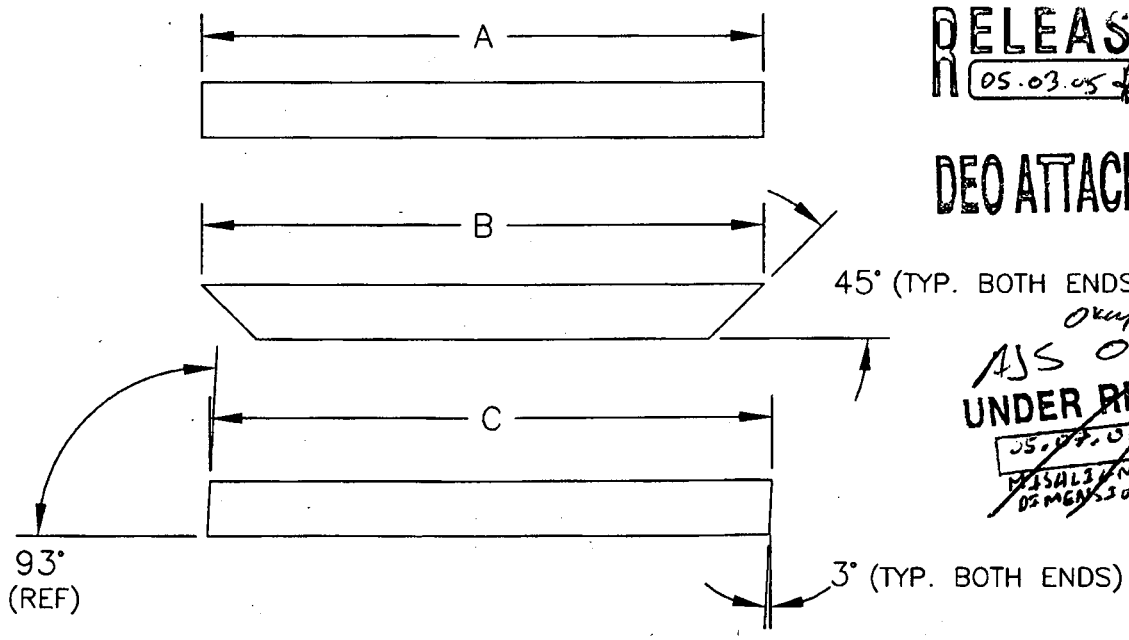

RELEASED
05.03.05
DEO ATTACHED

Okay
AJS 08.12.15
UNDER REVIEW
05.07.07 PH
FINISHED DIMENSION PG 2

D3324-1/-3/-5/-7/-9

1) CUT LENGTH/SHAPE PER DIAGRAM AND PARTS LIST
2) MATERIAL: 4130 COND. N SQ. TUBE PER MIL-T-6736, 1/2" SQ. x 0.035 WALL (REF. DART SPEC M4130N-TS0.500W.035)
3) ALL DIMENSIONS ARE IN INCHES
4) TOLERANCES ARE PER DART QSI 018 UNLESS OTHERWISE NOTED

Dart Aerospace Ltd

W/O:		WORK ORDER CHANGES						
DATE	STEP	PROCEDURE CHANGE		By	Date	Qty	Approval Chief Eng / Prod Mgr	Approval QC Inspector

Part No: _____ **PAR #:** _____ **Fault Category:** _____ **NCR:** Yes No **DQA:** _____ **Date:** _____

Resolution: _____ **Disposition:** _____ **QA: N/C Closed:** _____ **Date:** _____

NCR:		WORK ORDER NON-CONFORMANCE (NCR)							
DATE	STEP	Description of NC Section A	Corrective Action Section B				Verification Section C	Approval Chief Eng	Approval QC Inspector
			Initial Chief Eng	Action Description Chief Eng		Sign & Date			

NOTE: Date & initial all entries

H:\fFORMS\Quality Assurance\approved QA\NCRWO RevE

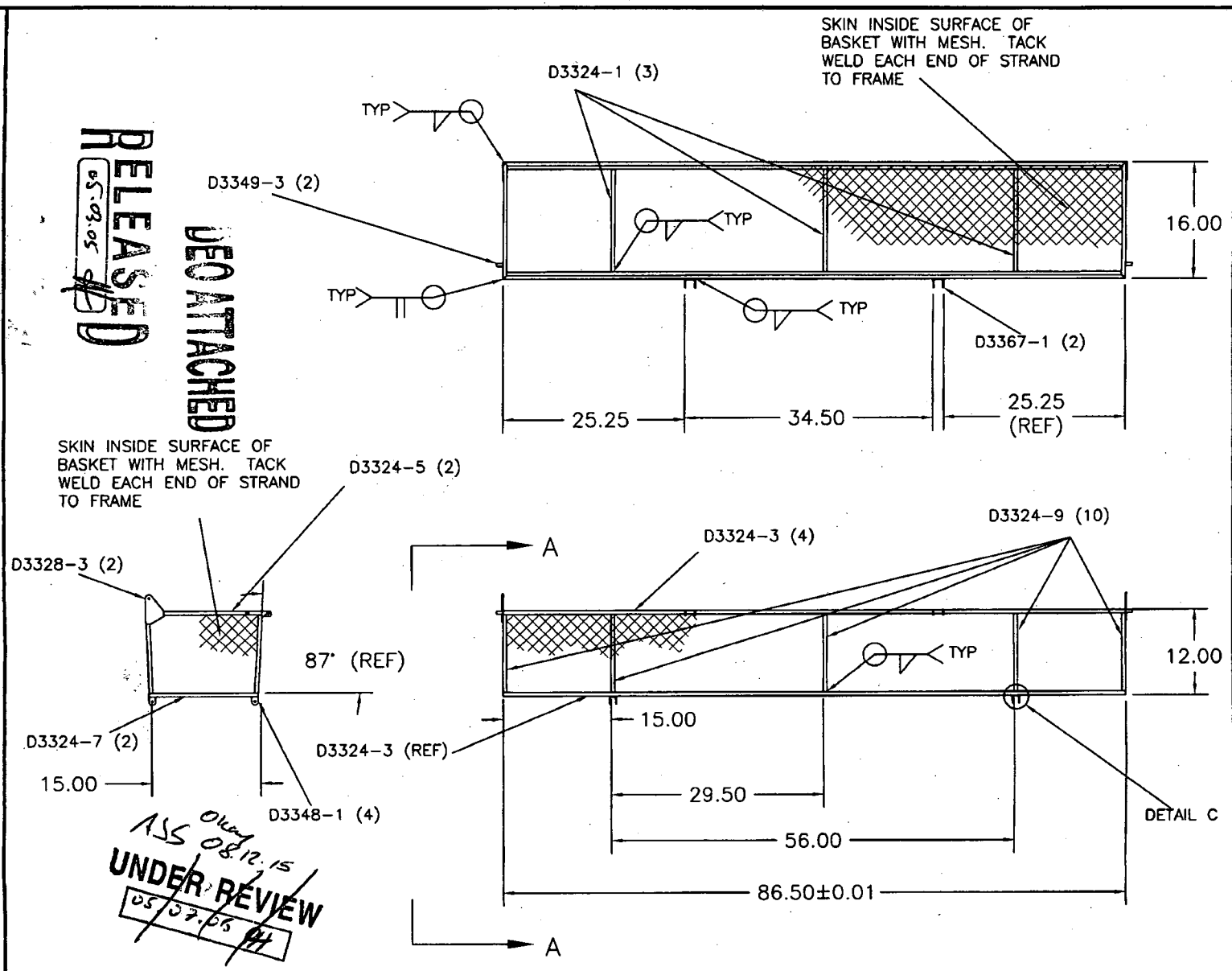

RELEASED 05.03.05

UEO ATTACHED

UNDER REVIEW 05.07.05

ASS 08.12.15

D3324-041 BASKET BASE ASSEMBLY

1) MESH MATERIAL: 1/2" - 18F GAUGE FLATTENED (0.040 THICK) EXPANDED CARBON STEEL (REF. DART SPEC. M569EX0.50-18F)
2) WELD PER DART QSI 004
3) FINISH: POWDER COAT ENTIRE ASSEMBLY WHITE (4.3.5.2) PER DART QSI 005 4.3
4) ALL DIMENSIONS ARE IN INCHES
5) ALL TOLERANCES ARE PER DART QSI 018 4.0 UNLESS OTHERWISE NOTED

DESIGN	DRAWN BY	DART AEROSPACE LTD HAWKESBURY, ONTARIO, CANADA	
CHECKED	APPROVED	DRAWING NO. D3324	REV. B
DATE 05.03.04		TITLE BASKET BASE ASSEMBLY	SHEET 2 OF 3
			SCALE 1:20

Dart Aerospace Ltd

W/O:		WORK ORDER CHANGES						
DATE	STEP	PROCEDURE CHANGE		By	Date	Qty	Approval Chief Eng / Prod Mgr	Approval QC Inspector

Part No: _____ **PAR #:** _____ **Fault Category:** _____ **NCR:** Yes No **DQA:** _____ **Date:** _____

Resolution: _____ **Disposition:** _____ **QA: N/C Closed:** _____ **Date:** _____

NCR:		WORK ORDER NON-CONFORMANCE (NCR)							
DATE	STEP	Description of NC Section A	Corrective Action Section B				Verification Section C	Approval Chief Eng	Approval QC Inspector
			Initial Chief Eng	Action Description Chief Eng		Sign & Date			

NOTE: Date & initial all entries

H:\fFORMS\Quality Assurance\approved QA\NCRWO RevE

DESIGN	DRAWN BY	DART AEROSPACE LTD HAWKESBURY, ONTARIO, CANADA	
PH	PH		
CHECKED	APPROVED	DRAWING NO.	REV. B
		D3324	SHEET 3 OF 3
DATE		TITLE	SCALE
05.03.04		BASKET BASE ASSEMBLY	1:8

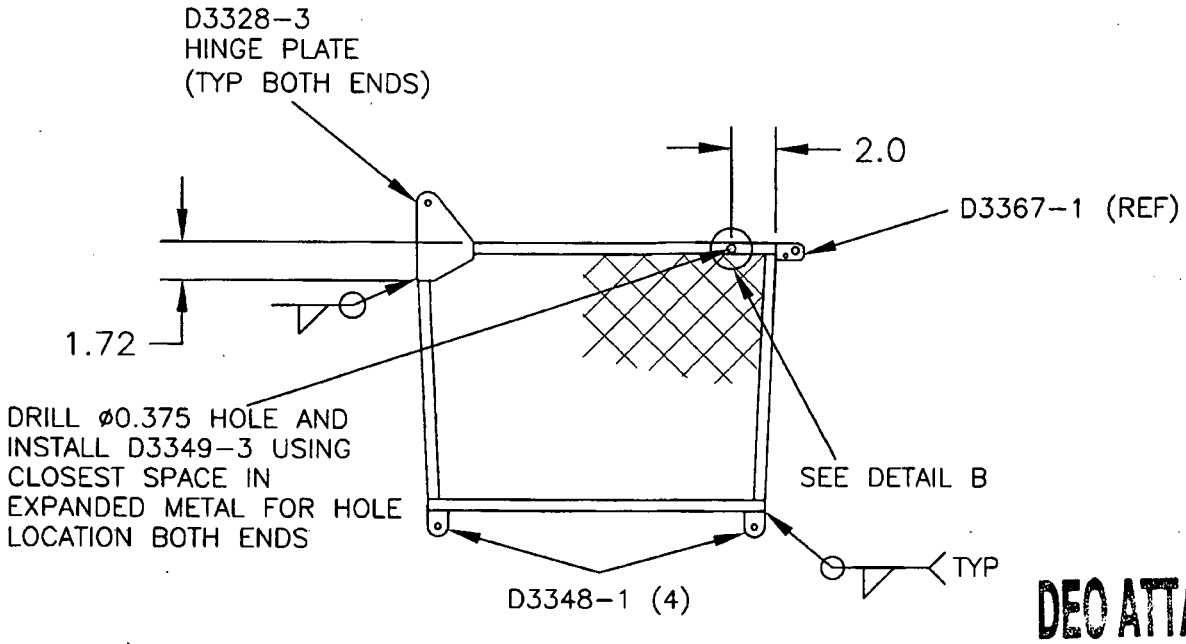

VIEW A-A

DEO ATTACHED

RELEASED 05.03.05

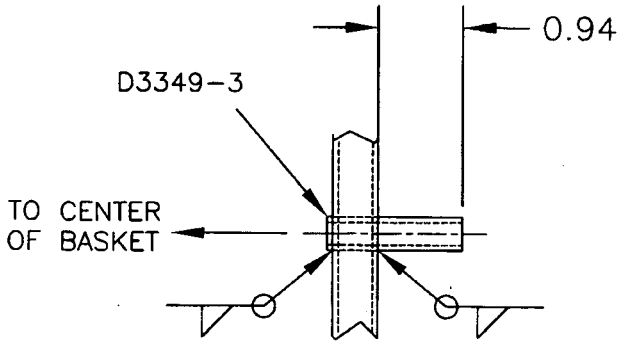

DETAIL B
(SCALE 1:2)

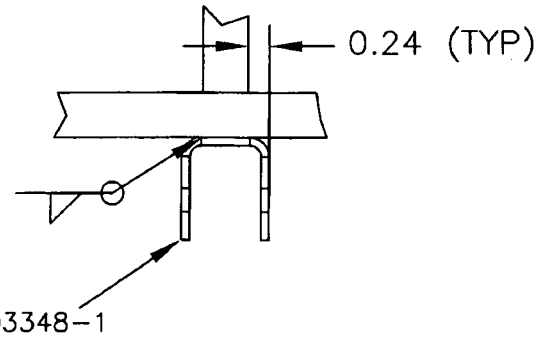

DETAIL C
(SCALE 1:2)

Okay
AJS 09.12.15

~~UNDER REVIEW~~
~~05.07.06~~

Dart Aerospace Ltd

W/O:		WORK ORDER CHANGES						
DATE	STEP	PROCEDURE CHANGE		By	Date	Qty	Approval Chief Eng / Prod Mgr	Approval QC Inspector

Part No: _____ **PAR #:** _____ **Fault Category:** _____ **NCR:** Yes No **DQA:** _____ **Date:** _____

Resolution: _____ **Disposition:** _____ **QA: N/C Closed:** _____ **Date:** _____

NCR:		WORK ORDER NON-CONFORMANCE (NCR)							
DATE	STEP	Description of NC Section A	Corrective Action Section B				Verification Section C	Approval Chief Eng	Approval QC Inspector
			Initial Chief Eng	Action Description Chief Eng		Sign & Date			

NOTE: Date & initial all entries

H:\fFORMS\Quality Assurance\approved QA\NCRWO RevE

DRAWING NO.	TITLE	REV. B	DART AEROSPACE LTD ENGINEERING ORDER	D.E.O. NO.	SHEET NO.	SCALE
D3324	BASKET BASE ASSEMBLY			D3324-B-1	SHEET 1 OF 1	NTS

DRAWN	AJS	CHECKED		MFG. APPR.		APPROVED		DE APPR.	
DATE	08.11.28	DATE	08.11.28	DATE	08/12/01	DATE	08/12/01	DATE	08.12.01

SHEET 2 MODIFY SIDE VIEW OF D3324-041 AS SHOWN:

IS:

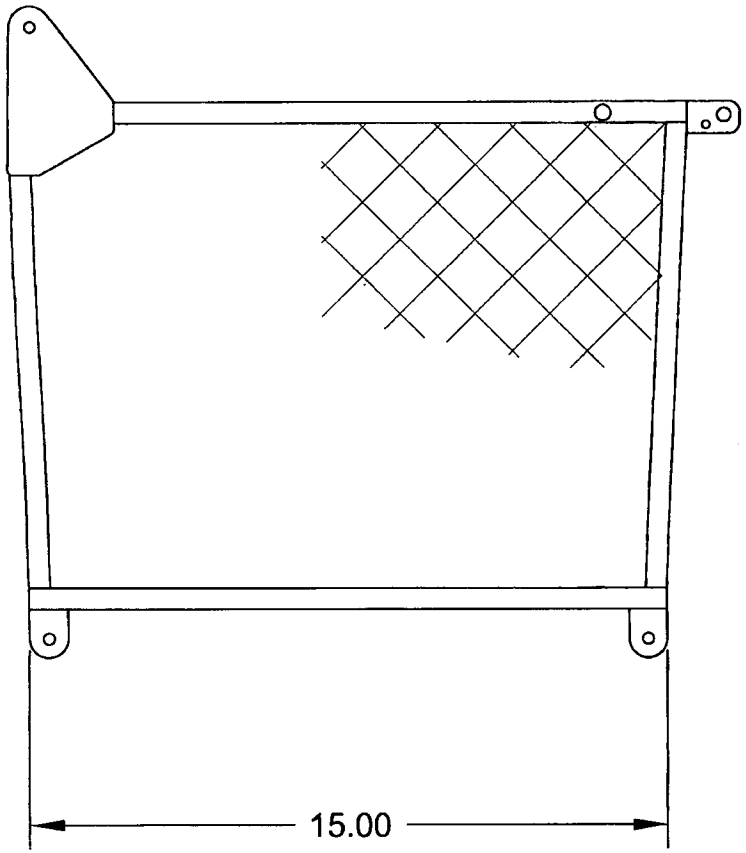

WAS:

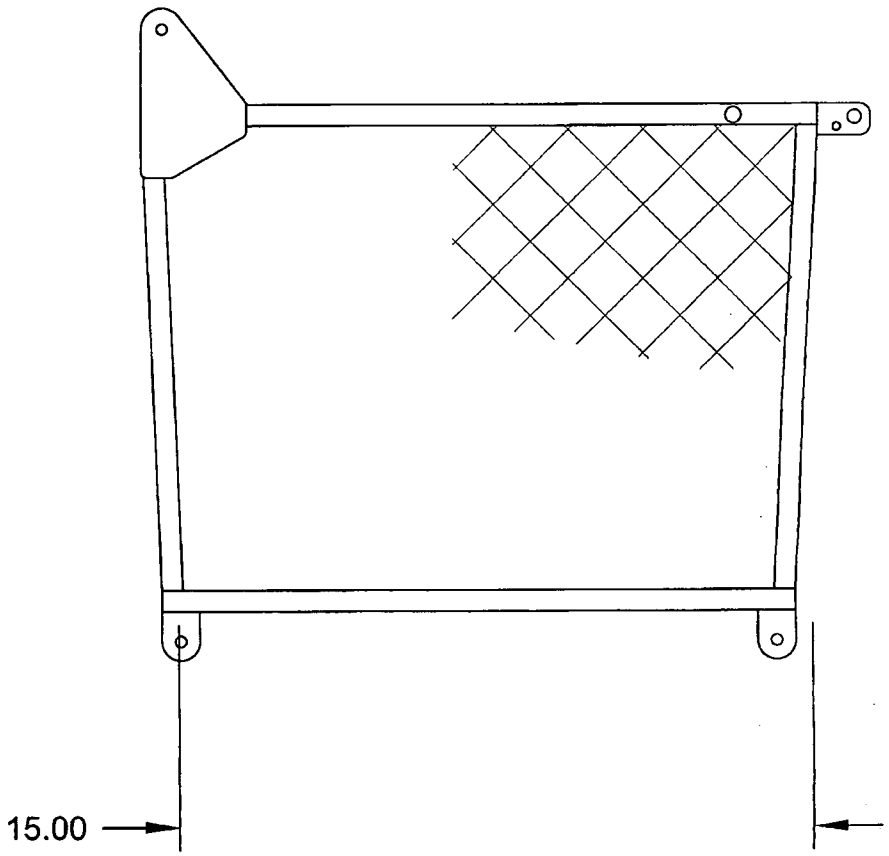

Dart Aerospace Ltd

W/O:		WORK ORDER CHANGES					
DATE	STEP	PROCEDURE CHANGE	By	Date	Qty	Approval Chief Eng / Prod Mgr	Approval QC Inspector

Part No: _____ **PAR #:** _____ **Fault Category:** _____ **NCR:** Yes No **DQA:** _____ **Date:** _____

Resolution: _____ **Disposition:** _____ **QA: N/C Closed:** _____ **Date:** _____

NCR:		WORK ORDER NON-CONFORMANCE (NCR)						
DATE	STEP	Description of NC Section A	Corrective Action Section B			Verification Section C	Approval Chief Eng	Approval QC Inspector
			Initial Chief Eng	Action Description Chief Eng	Sign & Date			

NOTE: Date & initial all entries

H:\fFORMS\Quality Assurance\approved QA\NCRWO RevE